MASTERLIFT 2.35 Pv Premium

ELWICO

www.elwico.com.pl

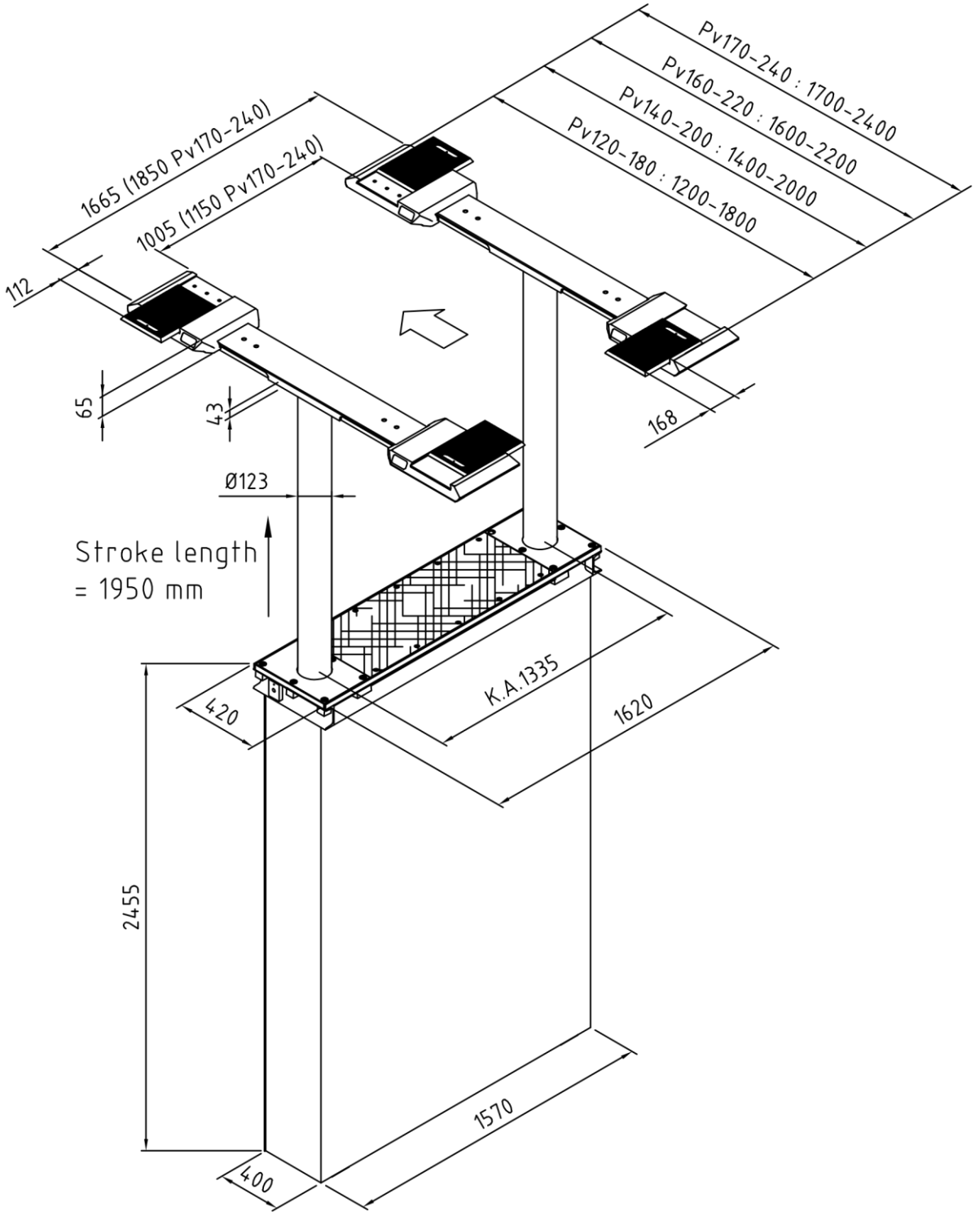

Dimension sketch incl. specification of level for drive-over height.

Constructional changes are subject to modifications * date 21 October, 2019